510/2/11xRK1,5/2xMMSKE-RDE 24 EMV-Z

Ex Junction box, zone 1, brass, IP66

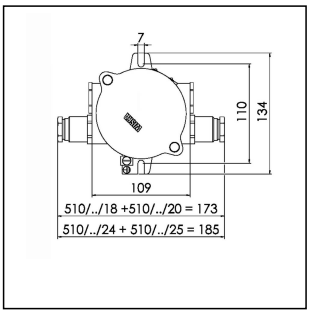

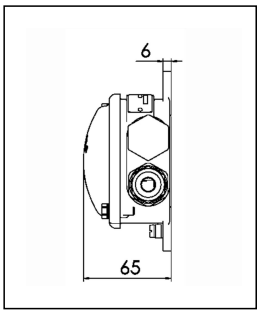

Products may differ in size, colour and appearance to those shown. If you require further information or customisation, please contact us directly.

Type	510/2/11xRK1,5/2xMMSKE-RDE 24 EMV-Z
WISKA-Order no.	10104222
Material	Brass
Protection class	IP66
Temp. range min	-55 °C
Temp. range max	130 °C
Operational areas	Explosion protection
Mounting	Surface mounting
Approval	RMRS, DNV-GL
Voltage	690 V
Weight	1,5 kg
Tariff number	85369010

Equipment:

- Position of cable entries is exchangeable
- 11 terminals 1,5mm²
- cable gland: 2x MMSKE-RDE 24 EMV-Z for armoured cable 7-17mm in diameter

24.10.2026

Your Contact:
WISKA Electric Systems (Shanghai) Co., Ltd · 维司卡电气设备(上海)有限公司
Room 703, Building 4, No. 258 Jinzang Road, Pudong Jinqiao Export Processing Zone, Shanghai, P.R.China 201206
上海市浦东新区金桥出口加工区金藏路258号4号楼703室 201206
☎ +86-21-58440056 · ☎ +86-21-58440027 · 🖷 +86-21-58440031 · contact@wiska.cn · www.wiska.cn

Other technical data on request / subject to change without notice

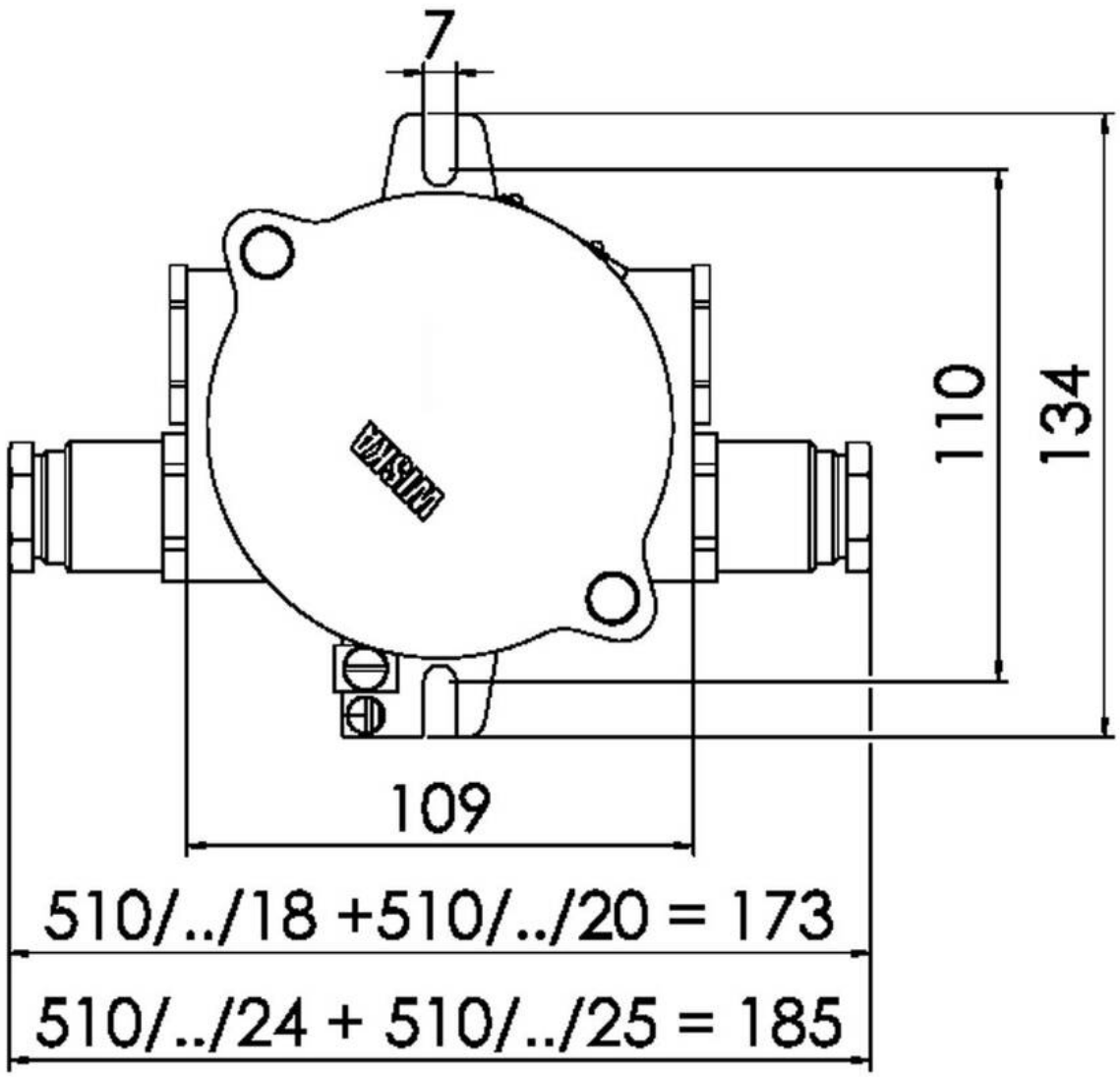

Your Contact:
WISKA Electric Systems (Shanghai) Co., Ltd · 维司卡电气设备(上海)有限公司
Room 703, Building 4, No. 258 Jinzang Road, Pudong Jinqiao Export Processing Zone, Shanghai, P.R.China 201206
上海市浦东新区金桥出口加工区金藏路258号4号楼703室 201206
☎ +86-21-58440056 · ☎ +86-21-58440027 · 🖷 +86-21-58440031 · contact@wiska.cn · www.wiska.cn

Other technical data on request / subject to change without notice

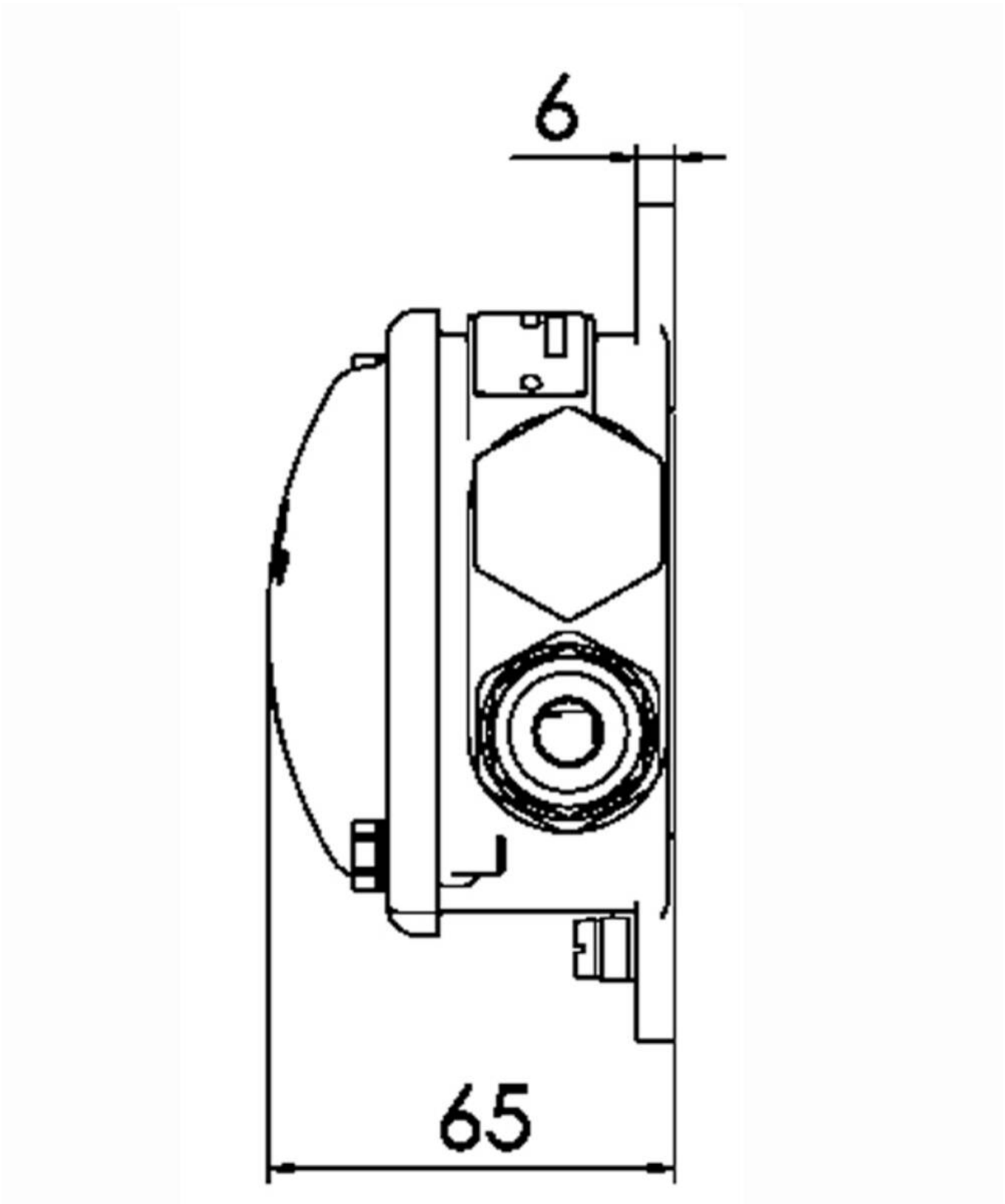

Your Contact:
WISKA Electric Systems (Shanghai) Co., Ltd · 维司卡电气设备(上海)有限公司
Room 703, Building 4, No. 258 Jinzang Road, Pudong Jinqiao Export Processing Zone, Shanghai, P.R.China 201206
上海市浦东新区金桥出口加工区金藏路258号4号楼703室 201206
☎ +86-21-58440056 · ☎ +86-21-58440027 · 🖷 +86-21-58440031 · contact@wiska.cn · www.wiska.cn

Other technical data on request / subject to change without notice