COMBI MAR 1210/EXT/POWER+IP

Junction box COMBI 1210, plastic, RAL9005, IP66/67



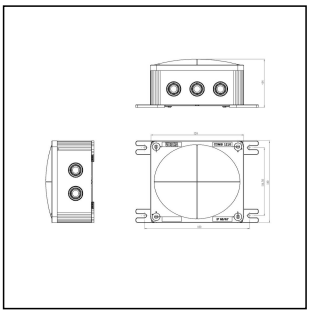

Products may differ in size, colour and appearance to those shown. If you require further information or customisation, please contact us directly.

Type	COMBI MAR 1210/EXT/POWER+IP
WISKA-Order no.	10114426
Material	Polypropylene
Protection class	IP66 / IP67
Temp. range min	-30 °C
Temp. range max	55 °C
Operational areas	Indoor / Outdoor
Range of use	Network system
for camera	IP
Mounting	Surface mounting
Colour	Black
Voltage	100 V - 240 V
Type of Voltage	AC, 50-60Hz
Max. Power	10 A
**Max. Wattage **	2400 W
Weight	0,8 kg
Tariff number	85369010

Remarks:

Junction box type COMBI 1210
Polypropylen, IP66/67, RAL 9005
Extension for Ethernet cable (RJ45)
and power supply up to 230VAC/16A
Cable gland: 4x ESKV 20

23.11.2026

Your Contact:
WISKA Electric Systems (Shanghai) Co., Ltd · 维司卡电气设备(上海)有限公司
Room 703, Building 4, No. 258 Jinzang Road, Pudong Jinqiao Export Processing Zone, Shanghai, P.R.China 201206
上海市浦东新区金桥出口加工区金藏路258号4号楼703室 201206
☎ +86-21-58440056 · ☎ +86-21-58440027 · 🖷 +86-21-58440031 · contact@wiska.cn · www.wiska.cn

Other technical data on request / subject to change without notice

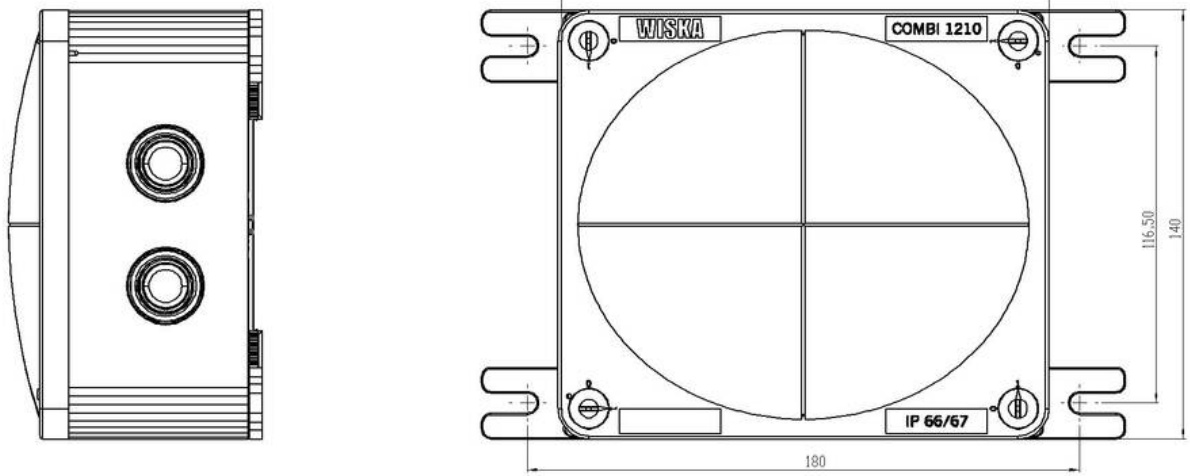

Your Contact:
WISKA Electric Systems (Shanghai) Co., Ltd · 维司卡电气设备(上海)有限公司
Room 703, Building 4, No. 258 Jinzang Road, Pudong Jinqiao Export Processing Zone, Shanghai, P.R.China 201206
上海市浦东新区金桥出口加工区金藏路258号4号楼703室 201206
☎ +86-21-58440056 · ☎ +86-21-58440027 · 🖷 +86-21-58440031 · contact@wiska.cn · www.wiska.cn

Other technical data on request / subject to change without notice